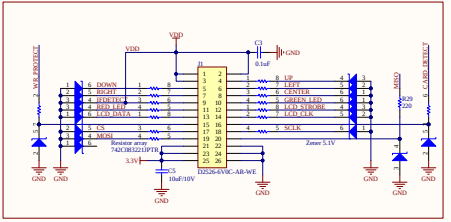

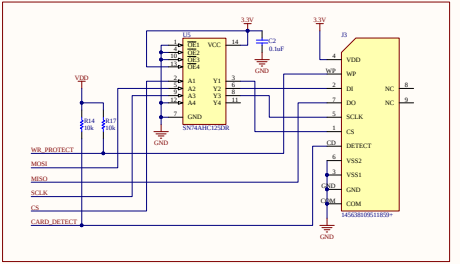

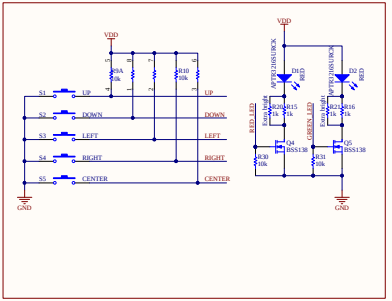

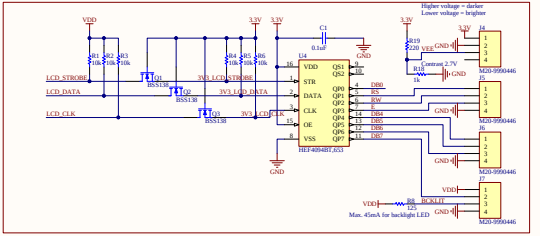

Title	
Size: B	Number:
Revision: A	
Date: 31.10.2016	Time: 20:34:07
Sheet 2 of 2	
File: Z:\makerbot_M_printer\MightyInterfaceBoard\MakerBot_LCD_Interface_rev1.5.SchDoc	

Altium